NASA Technical Memorandum 83774

Monolithic Microwave Integrated Circuits—Interconnections and Packaging Considerations

K. B. Bhasin, A. N. Downey, G. E. Ponchak,
R. R. Romanofsky, G. Anzic, and D. J. Connolly
Lewis Research Center
Cleveland, Ohio

Prepared for the
Fourth Annual International Electronics Packaging Conference
sponsored by The International Electronics Packaging Society
Baltimore, Maryland, October 29–31, 1984

NASA

MONOLITHIC MICROWAVE INTEGRATED CIRCUITS - INTERCONNECTIONS AND PACKAGING CONSIDERATIONS

K. B. Bhasin[1], A. N. Downey, G. E. Ponchak, R. R. Romanofsky,
G. Anzic, and D. J. Connolly
National Aeronautics and Space Administration
Lewis Research Center
Cleveland, Ohio 44135

SUMMARY

Monolithic Microwave Integrated Circuits (MMIC's) above 18 GHz are being developed because of important potential system benefits in the areas of cost, reliability, reproducibility, and control of circuit parameters. It is important to develop interconnection and packaging techniques that do not compromise these MMIC virtues. In this paper, currently available microwave transmission media are evaluated to determine their suitability for MMIC interconnections. An antipodal finline type of microstrip to waveguide transition's performance is presented. Packaging requirements for MMIC's are discussed in terms of thermal, mechanical, and electrical parameters for optimum desired performance.

INTRODUCTION

Advances in GaAs high frequency devices and materials technology (ref. 1) are making monolithic integration of microwave circuitry a possibility. GaAs monolithic microwave integrated circuits (ref. 2) (MMIC's) operating at high frequencies (Ku band and above) are showing promise for future space communications applications (ref. 3). The lightweight, small size, and high reliability of MMIC's (ref. 4) make them candidates to enable superior space communications systems. The application of MMIC's in space communications systems requires the development of transmit and receive modules for phased array antenna systems (ref. 5). In order to take full advantage of MMIC characteristics, the packaging and interconnection of MMIC's for integration at these frequencies requires numerous considerations. Low RF signal loss, wide bandwidth performance, manufacturability, and reliability are a few of them.

Characteristics of MMIC's which influence interconnections and packaging design, materials and fabrication requirements are described by presenting examples of MMIC's under development. For the RF input/output connections of MMIC's, a Van-Heuven type microstrip to waveguide transition which provides ease of MMIC integration for testing and packaging was chosen for detailed analysis. Improvements which have been obtained in the performance of this transition by modification in design and materials are discussed. Expected difficulties in obtaining maximum performance due to the high frequency of MMIC's are outlined. Based on available technology, packaging concepts are presented.

---

[1]NASA Resident Research Associate with the University of Cincinnati, Dept. of Electrical and Computer Engineering, Cincinnati, Ohio.

MONOLITHIC MICROWAVE INTEGRATED CIRCUITS

A prototype MMIC is illustrated in figure 1. Monolithic microwave integrated circuits (MMIC's) are mainly being fabricated on GaAs semi-insulating substrates. The monolithic approach allows the elimination of wire bonds (except for dc bias) used in hybrid microwave integrated circuits. The high dielectric constant (~13.0) of GaAs allows the fabrication of microstrip transmission line structures with small dimensions, facilitating the integration of various active and passive components on the same substrate. The high resistivity of a GaAs substrate allows the fabrication of active devices by epitaxial deposition of a doped layer or by an ion implantation process. The GaAs MESFET is the most used active device. Capacitors are formed using either interdigital or Metal-Insulator-Metal (MIM) structures, while resistors are formed using thin films of metals such as Cr, Ti, Ta, or cermets such as TaN (ref. 4). The various active and passive elements which form monolithic integrated circuits can be seen in figure 2. The circuit is designed to operate at frequencies of 27.5 to 30 GHz and is an amplifier circuit for a receiver module. The circuit was designed and developed by Hughes Aircraft Company under contract from NASA-Lewis Research Center (ref. 3).

The circuit shown in figure 1 is a transmit module which is being developed by Rockwell International for NASA-Lewis Research Center (ref. 3). The microwave input and output connections are 50 ohm microstrip transmission line structures rather than simple pads. Also, dc connections are noticeable as pads on the top of the MMIC chip. The chip size is 4.8 mm by 6.4 mm. This is the initial design layout and includes diagnostic test circuitry. The final layout could produce a smaller chip size. The module consists of five cascaded single bit phase shifters, digital control circuitry, a two-stage buffer amplifier and a three-stage power amplifier. The typical RF power output is expected to be above 200 mW in the 17.7 to 20.2 GHz frequency range with gain of 16 db.

This chip will require both RF input/output and dc connections to the circuit as is shown in figure 1. This combination of RF/dc connections to the same chip is what makes packaging designs of MMIC's more difficult than for conventional IC's. In addition to the direct connections to the chip, a means of coupling the RF input (output) from the waveguide efficiently over the proper bandwidth to the microstrip must also be considered in any packaging scheme if the advantages of MMIC's are to be preserved.

MMIC INTERCONNECTIONS

The dc biasing lines of MMIC's are routinely brought out to a pad on the side of a chip where a wire bond can be made to the pad, or a commonly available bus termination with pins for connections to the pads can be used for dc biasing. The RF input/output lines of microwave devices require much more complicated structures. Fifty ohm matched microstrip transmission lines are the widely adopted structure for MMIC RF input/outputs. The integration of the MMIC into the rest of the system requires an interconnection between the microstrip of the MMIC and the external transmission media, which is relatively transparent to the microwave signal. Characteristics of the interconnection used must include the following requirements:

1. Low insertion loss
2. Wide bandwidth
3. Reproducibility
4. Ease of bondability
5. RF match
6. Small size

Transmission media which have been proposed for use at the frequency ranges being considered are shown in figure 3. The characteristics of these transmission media are summarized in Table I. From the table it can be seen that microstrip and coplanar transmission lines have several characteristics which are desirable for MMIC interconnections. Coplanar structures have the ground plane on the same side of the substrate as the transmission line, but have higher losses than microstrip structures.

Based on currently available technology, the microstrip transmission line is the structure most widely used (ref. 6) for the microwave frequencies since it possesses a wide bandwidth, small geometric sizes, and relative ease of interconnection to module components. In addition, microstrip structures are easily made by printed circuit board techniques on a wide variety of substrates. The disadvantages of a microstrip is its high loss relative to some of the other structures. For that reason, a waveguide is commonly used as a transmission structure for interconnection of devices separated by more than short distances. In addition waveguide is almost always used for interconnection to test equipment above 18 GHz. Therefore, a means of coupling the microstrip energy to waveguide energy must be included in the module design.

Several microstrip to waveguide transitions have been investigated. Basically there are three types of transitions: The first is a probe type (ref. 7) in which the microstrip is outside the waveguide and an antenna like probe couples energy to the microstrip. Another type is the Van-Heuven type transition (ref. 8) in which the microstrip is placed in the center (E-plane) of the waveguide on a printed circuit and a complex finline type structure couples the waveguide energy to microstrip energy. The third type of structure incorporates microstrip on one of the waveguide walls in the H-plane and an E-plane structure couples the energy to it. Examples of such structures are cosine tapers (ref. 9) and stepped ridged transitions (ref. 10). Figure 4 shows the four transitions.

Van-Heuven Microstrip to Waveguide Transition

The transition proposed by Van-Heuven, and later modified by many others (refs. 9 and 12) as shown in figure 5, offers many advantages over the other types. Most important for packaging of MMIC chips in large numbers for use in complete systems, these transitions are in line with the waveguide making it highly suitable for system integration, are easily fabricated using low cost printed circuit board techniques, and are tunable in these characteristics by changing geometric parameters. Therefore, the Van-Heuven type transitions have been chosen for a detailed analysis since they seem to offer the best choice for packaging and testing of MMIC chips.

The effects of design and material parameters for this transition were studied in detail. For testing, transitions were fabricated on copper-clad

Teflon type substrate material. Transitions were then tested in the test fixture shown in figure 6 by reflection and transmission measurements. It was shown that the shape of the curved position and the geometric lengths of the transition controlled the characteristics of the transition. Therefore, by changing the geometric parameters of the transition, the bandwidth and degree of flatness over the bandwidth could be controlled.

The loss of the transition was determined to depend on both the shape of the transition and on inherent microstrip properties. Figure 7 shows the effects of varying design parameters on the characteristics of the transition. By tuning for the lowest insertion loss, a transition was designed which had 0.9 db of loss for two back-to-back transitions connected by 2 in of microstrip. By tuning for the widest bandwidth, for two back-to-back transitions connected by 2 in of microstrip an insertion loss of 1.25 db with a ripple of ±0.1 db over the frequency band of 26.5 to 40 GHz was obtained. (This circuit was not made on the optimal substrate material for lowest loss).

A theoretical analysis was carried out to determine the source of the losses observed. These losses were attributed to the microstrip structure itself and mismatching. Microstrip losses were due to conductor loss (α_c), dielectric loss (α_d) and radiation loss (α_r). The total microstrip loss (α_T) is then given by:

$$\alpha_T = \alpha_c + \alpha_d + \alpha_r$$

As the frequency increases above K-band, conductor losses tend to dominate. Dielectric loss is proportional to the dielectric dissipation factor (tan δ) of the material (see Table II). It is typically small compared to α_c for ceramic substrates, but it is quite significant for polymeric substrates. The calculated losses (ref. 13) for Teflon type substrates with no interfacial roughness were:

$$\alpha_c = 0.32 \text{ dB at 30 GHz}$$

$$\alpha_d = 0.27 \text{ dB at 30 GHz}$$

The radiation losses were ignored as the microstrip is in a shielded environment. Thus, a 0.53 dB loss is associated with the microstrip section of the transition.

Further experimental investigation of microstrips were carried out to determine the effect of the material properties on the insertion loss. Series symmetrical gap resonator pairs (ref. 6) were constructed using unshielded microstrips on several Teflon-type substrates. Using an automatic vector network analyzer, data on loss and dispersion (variation of phase velocity with frequency) was taken to 20 GHz. The microstrip loss was obtained from the Q-factor measurements as determined by the resonant line center frequency and 3 dB bandwidth. Table II provides a summary of experimental results as well as published data on various substrate materials (refs. 14 and 15) commonly used at these frequencies. The microstrip loss is slightly higher for Teflon substrates than for ceramics. This is due in part to the higher dissipation factor (tan δ) of Teflon substrates and also because of their higher surface roughness (ref. 16). It is also apparent that the ceramic type substrates tend to be more dispersive than Teflon types (due to higher dielectric constants).

The preliminary analysis of the Van-Heuven microstrip to waveguide transition has shown that improvements in design and materials can reduce losses to create a low loss transition.

MMIC PACKAGING

As presented earlier, the conventional packages used for IC's will not be suitable for MMIC packaging. Self-resonances (ref. 17) RF insertion loss, and mismatching are some of the problems encountered with the conventional packages. Additionally, there are problems associated with high frequency operation. The following considerations must be taken into account to develop MMIC packages.

1. Environment
2. Thermal management
3. Mechanical
4. Insertion loss
5. Impedance matching
6. Ease of bondability

The ceramic chip carrier (ref. 18) will be a likely candidate to provide hermetic sealing and bondability to the microstrip. The chip carrier and its packaging into complete transmit/receive module is described below.

MMIC Chip Carrier

An ideal MMIC chip carrier must minimize parasitics to obtain maximum performance of the MMIC. A schematic diagram of a MMIC chip is shown in figure 8. The ceramic substrate on which GaAs is placed should be as close as possible to GaAs in dielectric constant to obtain matching between the width of the microstrip lines; sapphire and alumina are two good choices for use as a chip carrier. The interior of the ceramic chip carrier must be metallized to minimize self-resonances. The ground planes of the GaAs chip can be connected through via holes to the ceramic substrate. The microstrip input/output interconnection lines through the ceramic walls are also very critical. The seal ring between the microstrip and the metallized package wall increases parasitics if it is not properly designed. MMIC's will generate significant amounts of power. The thermal considerations will require that the ceramic chip carrier be mounted on a substrate such as copper-clad Invar, which has the same coefficient of thermal expansion as certain ceramic substrates. Copper provides the media for thermal dissipation and also can act as a ground plane. The substrate must also allow attachment to the transition.

Chip Carrier/Module Interface

The microstrip/waveguide transition can provide the interconnections desired for packaging. Several packaging concepts based on this are discussed in figure 9. The design concept is based on the Van-Heuven microstrip to waveguide transition.

The MMIC chip carrier mounted on a suitable substrate is attached to the bottom piece of the T/R module shown in figure 9. The input/output of the finline are attached to the microstrip of the chip carrier via the ribbon bonding process.

Another type of packaging design is based on the probe type of coupling which Hughes Aircraft Co. has demonstrated in testing. The MMIC chip carrier is attached to the microstrip and energy is coupled via probe to waveguides. The chip carrier can be integrated in the middle of the input/output waveguide connections. Developments in microstrip-waveguide transitions are providing a base for various MMIC packaging schemes. High frequency aspects will put considerable demands on several packaging schemes.

CONCLUSIONS

GaAs monolithic microwave integrated circuits, operating from 20 to 40 GHz, are approaching the level where they can be considered for system integration. Low cost interconnections and packaging techniques are required which will preserve the advantages and characteristics of MMIC's.

The requirements for MMIC interconnections and packaging are significantly different than conventional IC's. Microstrip to waveguide transitions can provide a convenient means to interconnect MMIC's for testing and packaging.

Van-Heuven type microstrip to waveguide transitions were designed and evaluated. Design modifications and improvements in materials provided further increases in performance. Packaging concepts based on this transition that allow MMIC's to be integrated in the same plane were presented.

The need for design knowledge at high frequencies for an MMIC package which can meet various testability and integrability criteria offer the most challenges. Novel approaches in interconnection and packaging techniques may be essential to take full advantage of MMIC's.

REFERENCES

1. J. V. Dilorenzo and D. D. Khandelwal, GaAs FET principles and technology, Artech House, 1982.

2. L. C. Upadhyayula, M. Kumar and H. C. Huang, "GaAs MMICS Could Carry the Waves of the High-Volume Future," Microwave Systems News, July 1983, pp. 58-82, vol. 13, no. 7.

3. G. Anzic, T. J. Kascak, A. N. Downey, D. C. Liu, and D. J. Connolly, "Microwave Monolithic Integrated Circuit Development for Future Spaceborne Phased Array Antennas," Communication Satellite Systems Conference, 10th, Orlando, Florida, March, 1984. (AIAA Paper 84-0656).

4. R. A. Pucel, "Design Considerations for Monolithic Microwave Circuits," IEEE Transactions on Microwave Theory and Techniques, June 1981, pp. 513-534, vol. MTT-29, no. 6.

5. B. J. Edward, "Integration of Monolithic Microwave Integrated Circuits into Phased Array Antenna Systems," Proceedings of the 1983 Antenna Applications Symposium, Electromagnetic Lab. University of Illinois, Urbanna, Illinois.

6. T. C. Edwards, Foundations for Microstrip Circuit Design, John Wiley and Sons, 1981.

7. E. T. Watkins, "GaAs FET Amp Uses One-Quarter Micron Gate, Heralding MIC Opportunities at up to 60 GHz," Microwave Systems News, Dec. 1983, pp. 52 to 62, vol. 13, no. 13.

8. J. H. C. Van Heuven, "A New Integrated Waveguide-Microstrip Transition," IEEE Transactions on Microwave Theory and Techniques, Mar. 1976, pp. 144-146, vol. MTT-24, no. 3.

9. D. Rubin and D. Sanl, "mm Wave MICs use low value dielectric substrates," Microwave Journal, Nov. 1976, pp. 35-39, vol. 19.

10. S. S. Moochalla and C. An, "Ridge Waveguide used in microstrip transition," Microwaves and RF, Mar. 1984, pp. 149-152, vol. 23.

11. D. Rubin and D. L. Sahl, "The Microstrip Diplexer - A new tool for Millimeter Waves," June 1980, pp. 55-57, vol. 23.

12. M. Dydyk and B. D. Moore, "Shielded Microstrip Aids V-Band Receiver Designs," Microwaves, Mar. 1982, pp. 77-82, vol. 21.

13. K. C. Gupta, R. Garg and R. Chadhar, Computer-Aided Design of Microwave Circuits, Artech House, 1981.

14. A. Gopinath, R. Horton, and B. Easter, "Microstrip Loss Calculations," Electronics Letters, Jan. 22, 1970, pp. 40-41, vol. 6, no. 2.

15. J. H. C. Van Heuven, "Conduction and Radiation Losses in Microstrip," IEEE Transactions on Microwave Theory and Techniques, Sept. 1974, pp. 841-844, vol. 22, no. 9.

16. K. B. Bhasin, D. C. Liu and R. R. Romanofsky, "Effect of Interfacial characteristics of Metal clad-polymeric Substrates on High Frequency Interconnection Performance," to be presented at the Materials Research Society Meeting, Boston, Mass., Nov. 1984.

17. Y. Hirachi, Y. Takeuchi, M. Igarashi, K. Kosemura, and S. Yamamoto, "A Packaged 20 GHz 1-W MESFET with a Novel Via-Hole Plated Heat Sink Structure," IEEE Transactions on Microwave Theory and Techniques, Mar. 1984, pp. 309-316, vol. MTT-32, no. 3.

18. F. J. Dance, "Interconnecting Chip Carriers: A Review," Circuits Manufacturing, 1983, pp. 60-70, vol. 23.

19. J. L. Zemany and W. J. SooHoo, "Packaging of a GaAs FET Solid State Amplifier for a communication Satellite," Proceedings of the Technical Conference, 3rd Annual International Electronic Packaging Conference, Itasca, IL, Oct. 24-26, 1983, pp. S1-S6.

TABLE I. - CHARACTERISTICS OF MICROWAVE/mm WAVE TRANSMISSION MEDIA

Type of transmission media/characteristics	Relative size	Integration to solid state devices	Q-factor	Power handling capability
Waveguide	Large	Difficult	1000 and above	Large
Microstrip line	Small	Easy	Several hundreds	Low
Coplanar transmission line	Small	Easy	Several hundreds	Low
Finline	Moderate	Easy	Several hundreds	Low
Suspended stripline	Moderate	Easy	Several hundreds	Low
Dielectric waveguide (image line)	Moderate	Difficult	1000 and above	Moderate

TABLE II. - REPORTED ELECTRICAL AND MECHANICAL CHARACTERISTICS

Substrate	Relative dielectric constant	RF loss at 106 Hz, dB/λ	Dispersion		Surface roughness, μm	Tan δ	Thermal conductivity, W/cm °C
			Er at 10 GHz	Er at 20 GHz			
31 mil Cu Flon	2.1	0.09	1.83	1.88	0.8 to 1.0	0.00045	~0.003
31 mil Cu Clad 217	2.17	.12	1.92	2.00	.8 to 1.2	.0009	~ .003
31 mil RT/Duroid 5880	2.2	.10	1.92	1.95	.8 to 1.2	.0009	~ .003
25 mil Fused Silica	3.78	.07[a]	3.10	3.16	.03	.0001	.013
20 mil Alumina (99.5 percent)	9.35	.09	7.05	7.5	<.4	.00025	.25
20 mil Sapphire	11.6	------	7.4	8.0	.03	<.0001	.38

[a]Ra = 0.4 μm.

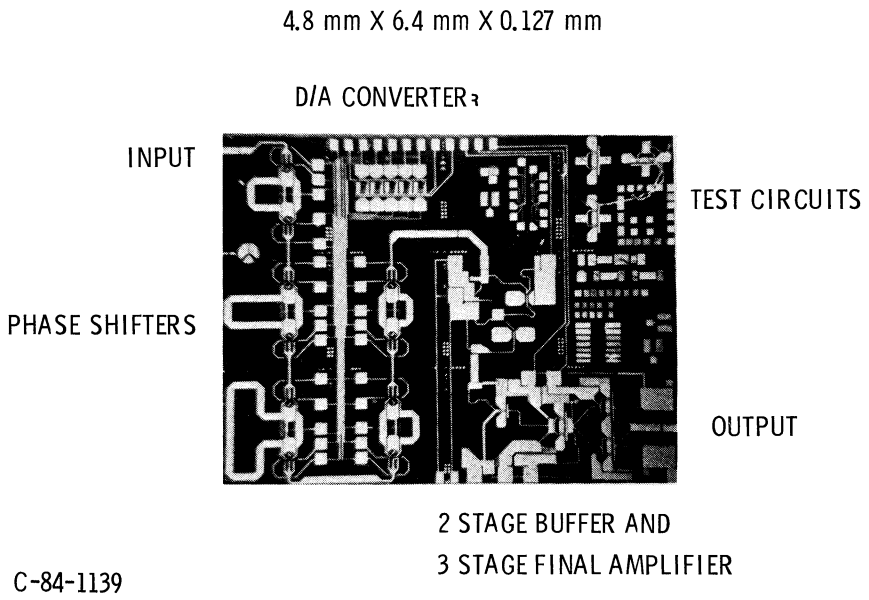

Figure 1. - 20 GHz monolithic transmit module.

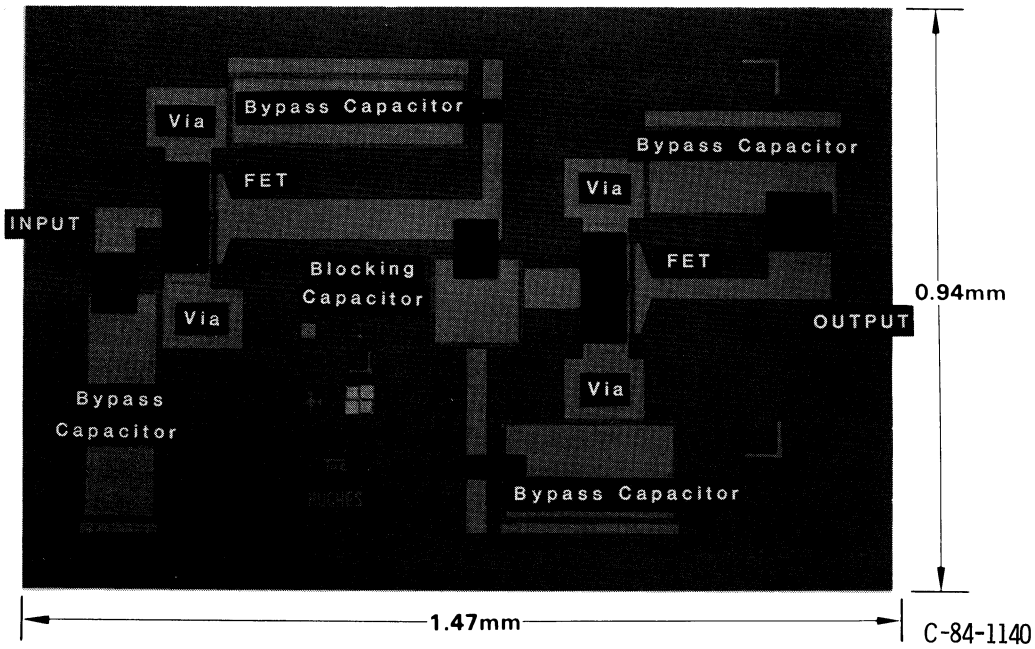

Figure 2. - 27.5 - 30 GHz monolithic low noise amplifier.

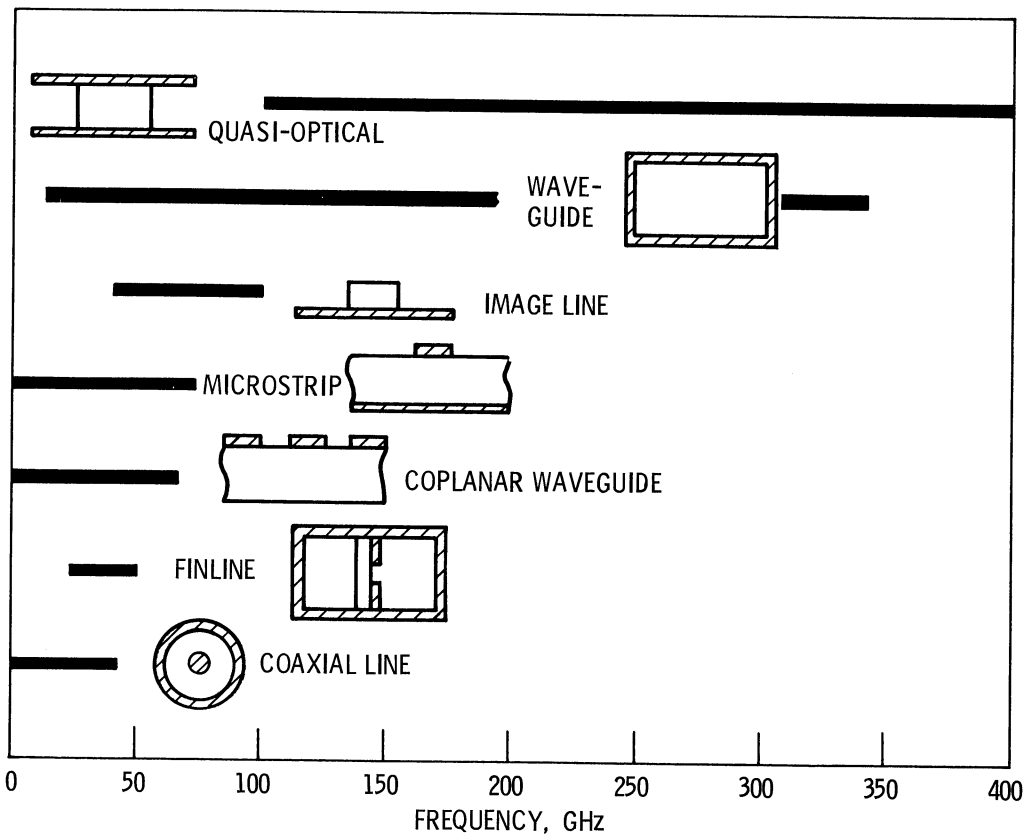

Figure 3. - Microwave/mm wave transmission media.

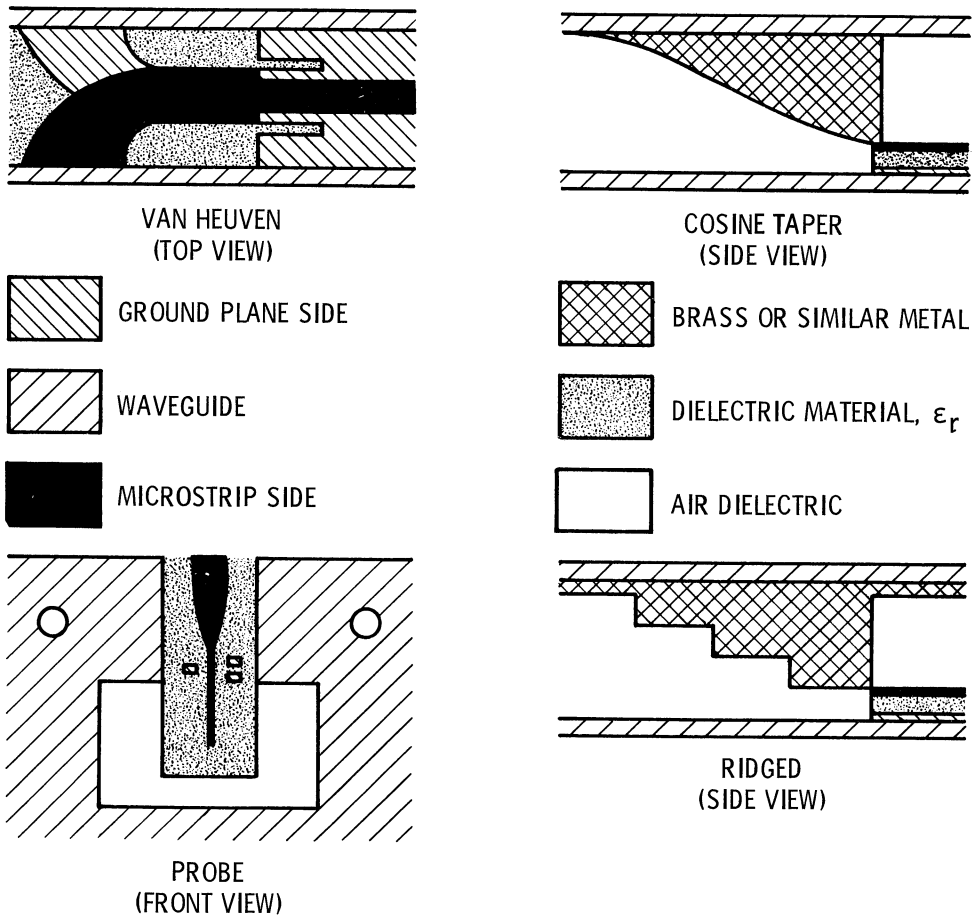

Figure 4. - Microstrip/waveguide transitions.

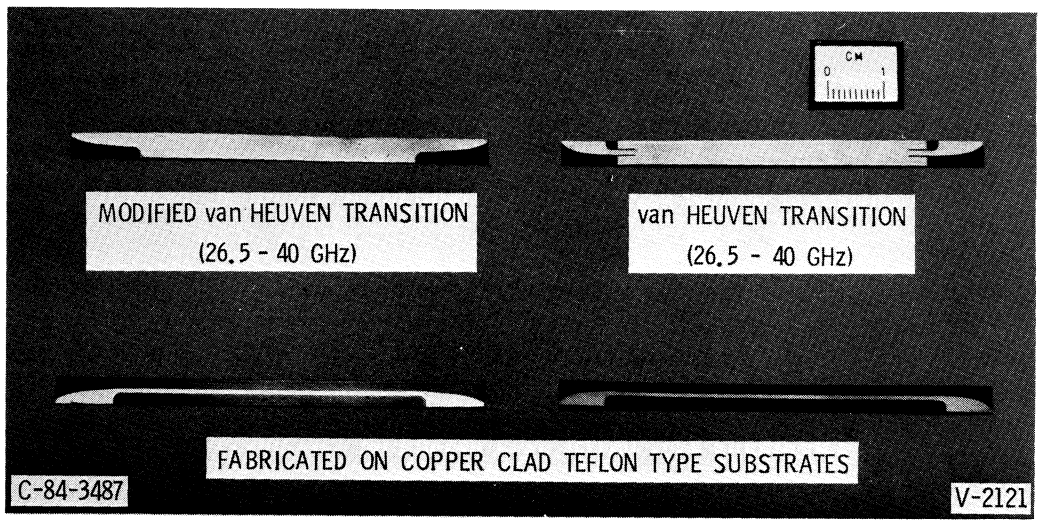

Figure 5. - Waveguide to microstrip transitions.

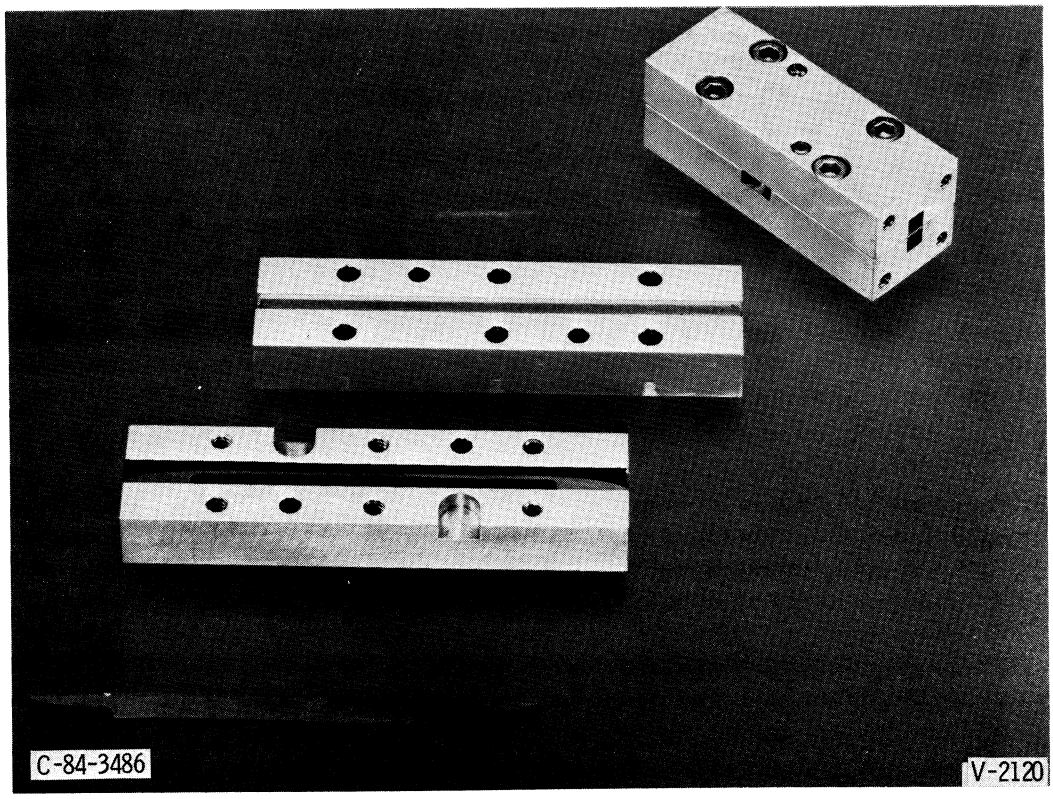

Figure 6. - 26.5 - 40 GHz waveguide to microstrip transition in test fixture.

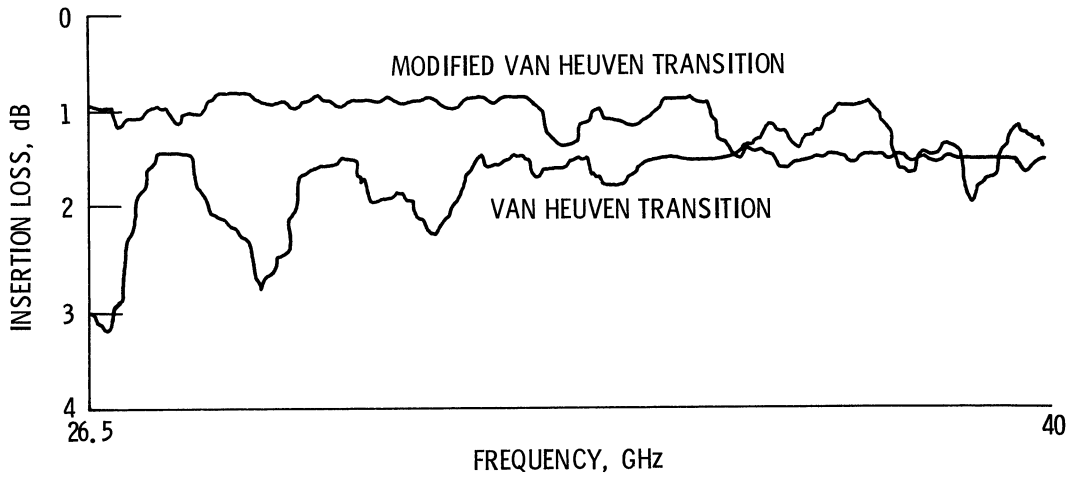

Figure 7. - Insertion loss measurements. Note: above two insertion loss plots are for two back to back transitions with 2 in. of microstrip connnecting them.

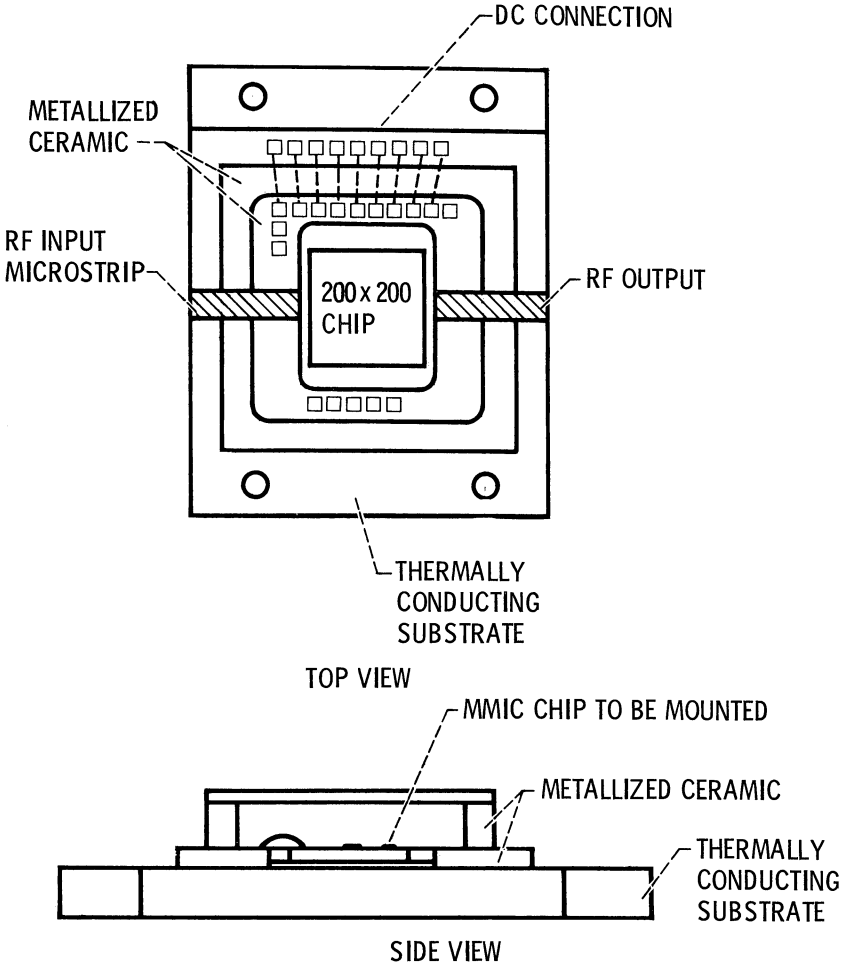

Figure 8. - MMIC chip carrier.

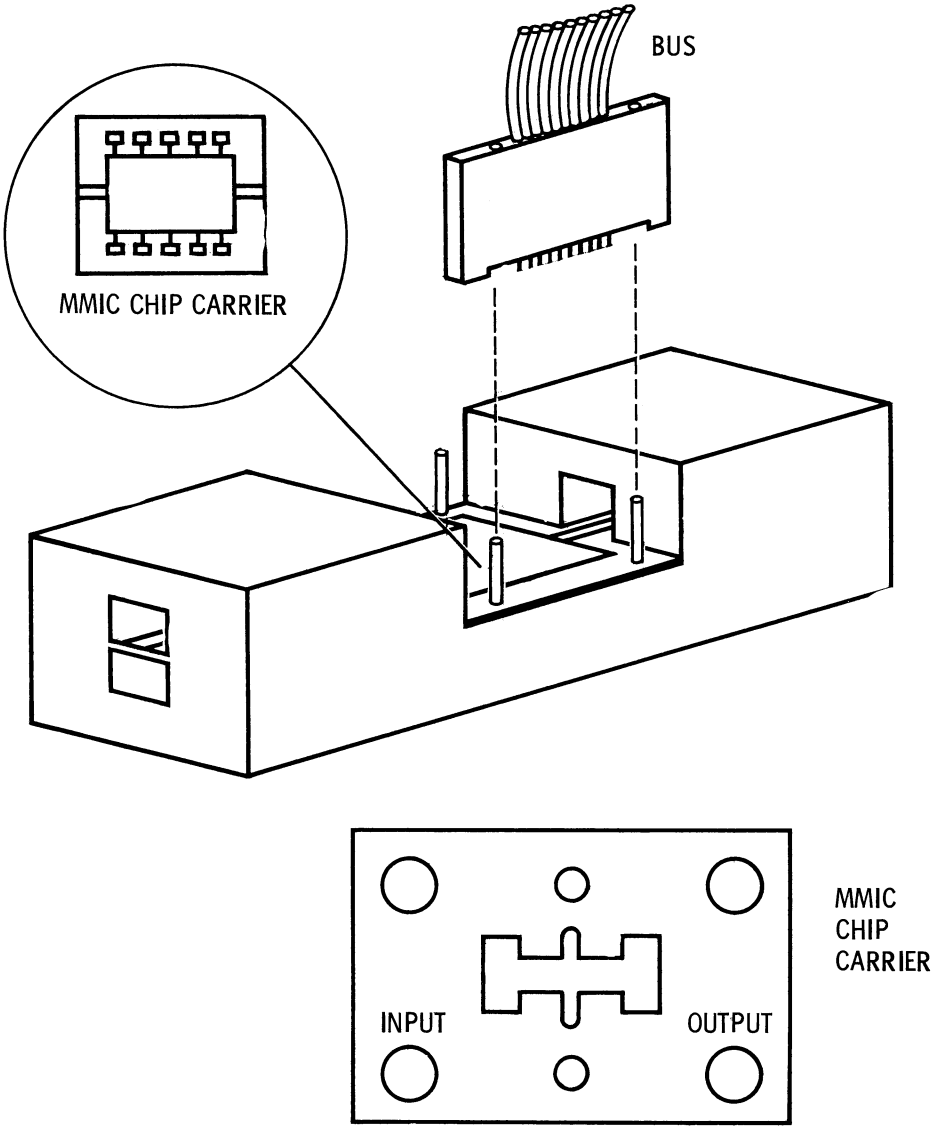

Figure 9. - Packaging concepts for MMIC's.

1. Report No.	2. Government Accession No.	3. Recipient's Catalog No.
NASA TM-83774		

4. Title and Subtitle	5. Report Date
Monolithic Microwave Integrated Circuits - Interconnections and Packaging Considerations	6. Performing Organization Code: 506-58-22
7. Author(s): K. B. Bhasin, A. N. Downey, G. E. Ponchak, R. R. Romanofsky, G. Anzic, and D. J. Connolly	8. Performing Organization Report No.: E-2266
	10. Work Unit No.
9. Performing Organization Name and Address: National Aeronautics and Space Administration, Lewis Research Center, Cleveland, Ohio 44135	11. Contract or Grant No.
	13. Type of Report and Period Covered: Technical Memorandum
12. Sponsoring Agency Name and Address: National Aeronautics and Space Administration, Washington, D.C. 20546	14. Sponsoring Agency Code

15. Supplementary Notes

K. B. Bhasin, NASA Lewis Resident Research Associate and the University of Cincinnati, Dept. of Electrical and Computer Engineering, Cincinnati, Ohio; A. N. Downey, G. E. Ponchak, R. R. Romanofsky, G. Anzic, and D. J. Connolly, NASA Lewis Research Center. Prepared for the Fourth Annual International Electronics Packaging Conference sponsored by The International Electronics Packaging Society, Baltimore, Maryland, October 29-31, 1984.

16. Abstract

Monolithic Microwave Integrated Circuits (MMIC's) above 18 GHz are being developed because of important potential system benefits in the areas of cost, reliability, reproducibility, and control of circuit parameters. It is important to develop interconnection and packaging techniques that do not compromise these MMIC virtues. In this paper, currently available microwave transmission media are evaluated to determine their suitability for MMIC interconnections. An antipodal finline type of microstrip to waveguide transition's performance is presented. Packaging requirements for MMIC's are discussed in terms of thermal, mechanical, and electrical parameters for optimum desired performance.

17. Key Words (Suggested by Author(s))	18. Distribution Statement
Monolithic microwave integrate circuits; Electronics interconnections and packaging transmission line structures	Unclassified - unlimited STAR Category 32

19. Security Classif. (of this report)	20. Security Classif. (of this page)	21. No. of pages	22. Price*
Unclassified	Unclassified		

*For sale by the National Technical Information Service, Springfield, Virginia 22161

National Aeronautics and
Space Administration

Washington, D.C.
20546

Official Business
Penalty for Private Use, $300

SPECIAL FOURTH CLASS MAIL
BOOK

U.S. MAIL

Postage and Fees Paid
National Aeronautics and
Space Administration
NASA-451

NASA

POSTMASTER: If Undeliverable (Section 158 Postal Manual) Do Not Return