30 and 90 MHz Oscillators Operating Through 450 and 470 ºC for High Temperature Wireless Sensors

George E. Ponchak, Maximilian C. Scardelletti, and Jennifer L. Jordan

NASA Glenn Research Center, 21000 Brookpark Rd., Cleveland, OH 44135

george.ponchak@ieee.org, Maximilian.C.Scardelletti@nasa.gov, jennifer.l.jordan@nasa.gov

***Abstract* — This paper presents the first demonstration of oscillators operating above 400 ºC. The oscillators are fabricated with Cree SiC MESFETs and thin film, MIM capacitors and inductors on an alumina substrate. The tank circuit inductor is used to magnetically couple the oscillator signal to a coil placed 1 m from the circuit. The first oscillator is designed at 30 MHz, it operated at 27.8 MHz, and the second is designed to operate at 100 MHz, it operated at 90 MHz. The 30 MHz oscillator operated through 450 ºC and the 100 MHz oscillator operated through 470 ºC. The received power, frequency, and phase noise as a function of temperature is presented. In addition, the failure mechanism of the oscillator is discussed.**

***Index Terms* — SiC, Oscillator, High Temperature, Wireless Sensor.**

I. Introduction

High temperature sensors are finding uses in a variety of commercial applications, such as in automobiles, including on-engine sensors that operate up to 150 ºC, power brake sensors that operate through 140 ºC, and engine exhaust sensors operating through 850 ºC [1]. The development of geothermal energy is progressing rapidly because it is a clean energy, but the drilling to and monitoring of the subterranean temperature requires sensors operating to as high as 300 ºC [2]. Oil and natural gas drilling requires sensors and electronics that operate through 225 ºC [3], and aircraft engine intelligent control and health monitoring require many different sensors [4] that operate over a range of temperatures through 500 ºC [5], [6], and probably higher.

Wireless pressure sensors operating at 270 ºC and 20 MHz and 400 ºC and 20 MHz have been demonstrated in [7], [8], respectively. Although the Cree SiC MESFET in [7] is operating at a carrier temperature of 400 ºC, the capacitors and resistors are probably operating at a lower temperature because they are mounted normal to the substrate. A 1 GHz oscillator and a 1 GHz active antenna (oscillator and antenna) operating at 200 ºC and 270 ºC have been demonstrated in [9] and [10], respectively; these circuits used chip capacitors and Cree SiC MESFETs mounted onto the carrier.

In this paper, two oscillators operating above 400 ºC employing Cree SiC MESFETs and thin film, MIM capacitors and inductors are reported for the first time. The inductors in the LC tank circuit are used to magnetically couple the oscillator output to a wire coil 1 m above the circuit. The received power, frequency, and phase noise are presented as a function of temperature. Also, the failure mechanisms of the oscillator are presented.

II. Oscillator Design and Fabrication

A Clapp-type oscillator design [11], shown in Fig. 1, is used because it has advantages for wireless sensors operating over a wide temperature range. The oscillation frequency is:

$$f_0 \quad 1/2 \quad \sqrt{L_T \quad C} \tag{1}$$

where L_T is the tank circuit inductance and C is the total capacitance, which is found from

$$\frac{1}{C} \quad \frac{1}{C_1 \quad C_{DS}} \quad \frac{1}{C_2 \quad C_{GS}} \quad \frac{1}{C_T} \tag{2}$$

Thus, if $C_2 >> C_{GS}$ and $C_1 >> C_{DS}$, any variations in the transistor capacitances, C_{GS} and C_{DS}, with temperature have minimal affect on the oscillation frequency. Furthermore, the oscillation frequency can be established by the tank circuit capacitance and inductance, C_T and L_T if C_1, $C_2 >> C_T$. The gain condition for the circuit is

$$g_m \quad {}_0{}^2 R_s C_1 C_2 \tag{3}$$

where R_s is the resistance of the inductor. Because the circuit gain is inversely proportional to C_1 and C_2 and the transconductance decreases monotonically with temperature, a tradeoff is made between frequency stability and the maximum temperature of oscillation.

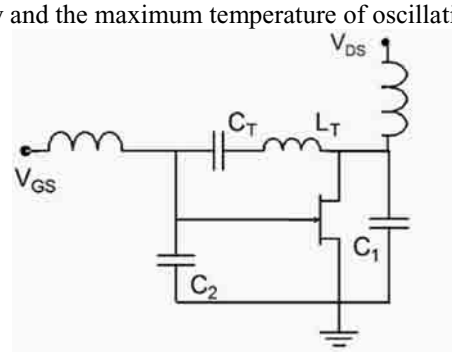

Figure 1: Schematic of Clapp-type oscillator.

A Cree SiC MESFET, model number CRF24010D, is used in the circuit. From measurements, C_{GS} and C_{DS} are determined to be 2.5 pF and 1.2 pF, respectively, for V_{DS}=10 V and I_{DS}=50 mA across a temperature range of 25 to 450 ºC. Two oscillators are designed, one at 30 MHz and one at 100 MHz, based on the tradeoffs outlined

Copyright 2010 IEICE

above, the maximum reasonable inductance that can be obtained from a thin film, planar inductor with low series resistance, and considering that a MEMS pressure sensor with 14 pF nominal capacitance will be integrated into the circuit at a later time. The circuit element values are given in Table I.

Table I: Circuit element values for the two oscillators.

Freq (MHz)	C_1(pF)	C_2(pF)	C_T(pF)	L_T(nH)
30	50	50	14	3000
100	20	20	14	400

The oscillators are fabricated on double side polished, 99.6% Alumina substrates with a thickness of 508 m. The fabrication uses thin film processing. The inductors are designed based on simulations in Sonnet. The 3000 nH inductor is a 10 turn, square, planar spiral with a strip width and spacing of 1 mm and a 9 mm inner turn side length. The 400 nH inductor is a 2 turn, circular, planar spiral with 1 mm line width and spacing; the inner turn diameter is 35 mm. The inductors provide magnetic coupling for wireless signal transmission. Because the circuits will be heated to high temperature, airbridges are not used. Instead, the crossover is supported by a 1.6 m thick SiO_2 layer. The thin film, metal-insulator-metal (MIM) capacitors use the 1.6 m SiO_2 as the insulator. The metallization is: 25 nm Cr/500 nm Au for the first layer, which is the bottom plate of the MIM capacitors; 25 nm Ti/ 1.7 m Au second layer, and another 1.7 m Au, resulting in total metal thickness of 3.9 m to reduce the circuit resistive loss; all metals are deposited by electron beam evaporation and defined by lift-off processing. The SiC MESFET is attached to the circuit with an epoxy and two wire bonds are used to each contact pad to reduce the parasitic inductance and resistance. A photo of the 100 MHz circuit is seen in Fig. 2.

III. Measurement Procedure

The oscillator is characterized in an anechoic chamber with the electronic test equipment outside the room. The circuits are biased with Agilent DC voltage sources and the gate and drain currents are monitored. Cascade Microtech, DC needle probes are used to provide bias to the oscillator, and approximately 5 m of wire links the bias supplies to the oscillator. The oscillator is placed on a ceramic heater stage with a Labview controlled power supply to adjust and hold the temperature. Between the ceramic heater and the alumina substrate of the oscillator, four pieces of 508 m alumina are placed to minimize the interaction of the inductor and the ceramic heater. The thermocouple for temperature measurement is placed on top of the alumina pieces, so the measured and reported temperature is the temperature on top of the alumina substrate away from the transistor. When the temperature setting is increased, the temperature typically overshoots the desired temperature by 10 ºC. Before measurements, the temperature is held constant with the oscillator operating for 10 minute to assure thermal equilibrium is reached. A 20 turn, 20 cm diameter wire coil is used to receive the transmitted signal from the oscillator, and this coil is connected to an Agilent E4440A Spectrum Analyzer through a 6 m coaxial cable.

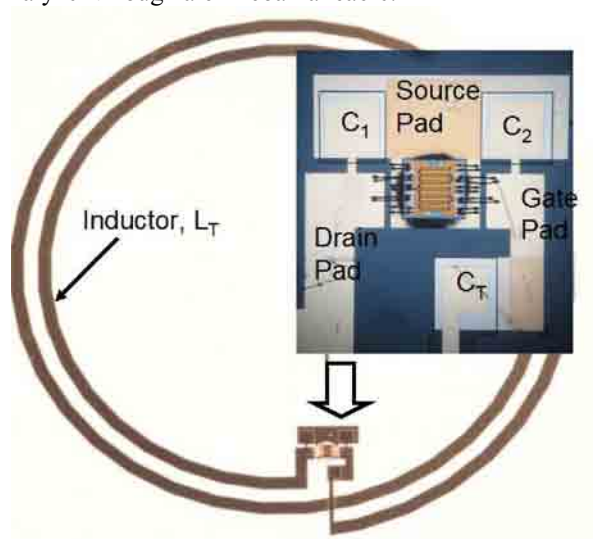

Figure 2: Photograph of the 100 MHz oscillator.

IV. Measured Results

The measured spectrum of the 30 MHz wireless circuit at 25 and 450 ºC is shown in Fig. 3. Throughout the temperature range, the gate voltage is varied to maintain a drain current of 50 mA from a 10 V supply. First, it is seen that the oscillation frequency shifted downward due to the testing environment. Second, the frequency and the transmitted power decrease with increasing temperature. Figure 4 shows the peak received power and the frequency as a function of temperature; the received power remains stable and decreases by only 5 dBm over the temperature range of 25 to 400 ºC. However, the power decreases rapidly with temperature after 400 ºC. The oscillation frequency varies by less than 0.5% over the temperature range.

The measured spectrum of the 100 MHz oscillator circuit is shown in Fig. 5 at 25 and 470 ºC, and Fig. 6 shows the peak power and oscillation frequency as a function of temperature. As with the 30 MHz design the received power is stable and decreases by less than 5 dBm over the temperature range of 25 to 375 ºC; for temperatures greater than 375 ºC, the power decreases rapidly. The oscillation frequency varies by less than 2% over the temperature range, but it is also lower than the design frequency due to the ceramic heater and test environment.

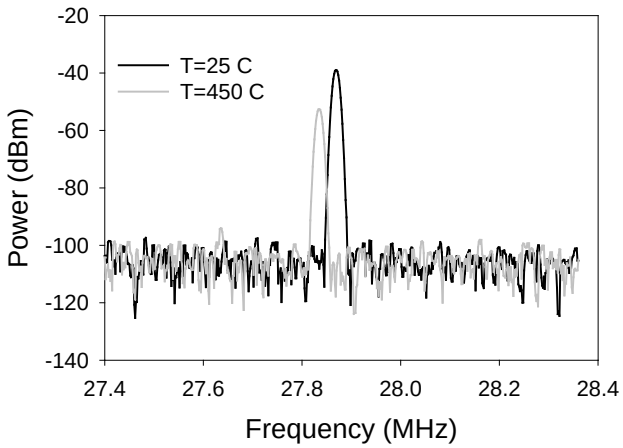

Figure 3: Measured spectrum of 30 MHz circuit at 25 and 450 ºC.

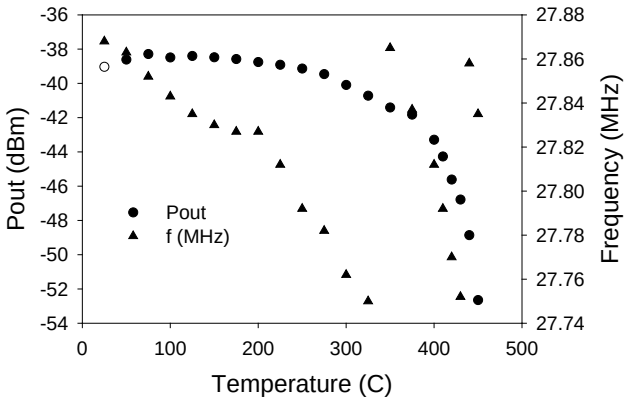

Figure 4: Measured peak power and oscillation frequency of the 30 MHz circuit as a function of temperature.

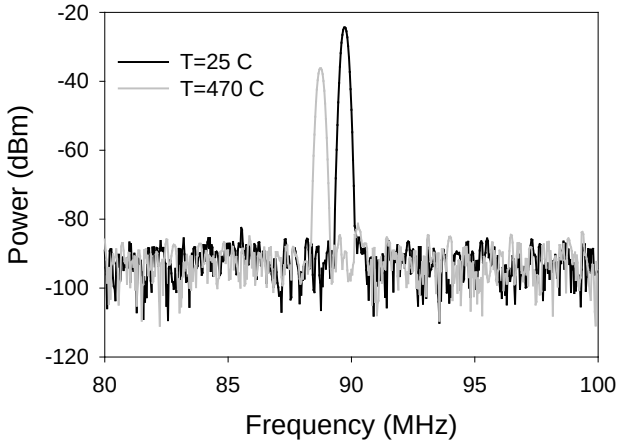

Figure 5: Measured spectrum of 100 MHz circuit at 25 and 470 ºC.

The measured phase noise at 25 and 470 ºC is shown in Fig. 7, and the measured phase noise at 100 kHz offset versus temperature is shown in Fig. 8. As expected, the noise far from the carrier increases with temperature, but interestingly, the phase noise at 100 kHz offset decreases with temperature, which requires further study.

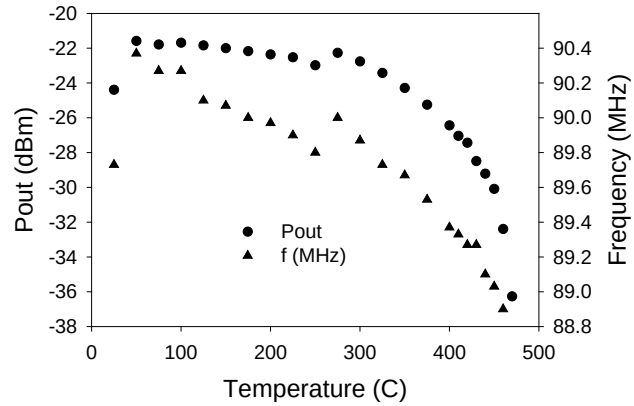

Figure 6: Measured peak power received and oscillation frequency of 100 MHz design.

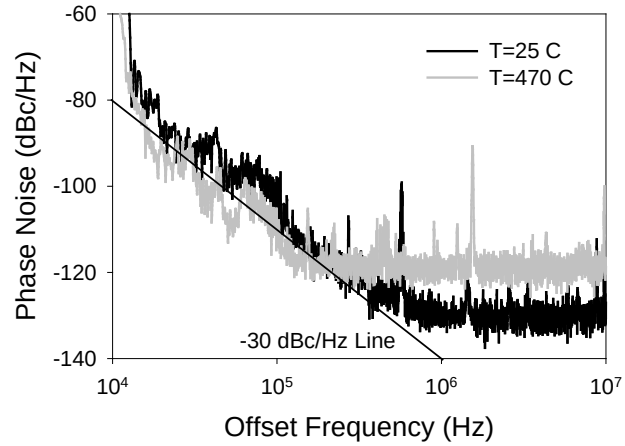

Figure 7: Measured phase noise of 100 MHz circuit at 25 and 470 ºC.

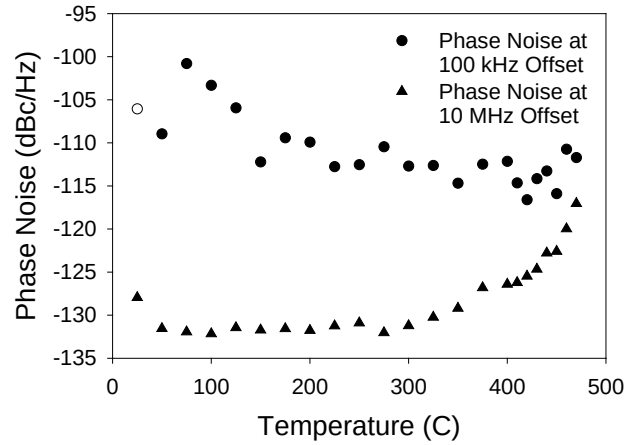

Figure 8: Measured phase noise at 100 kHz offset frequency as a function of temperature.

V. Failure Mechanism

Because the transistors are drawing 500 mW of DC power, the junction temperature is expected to be 50 ºC higher than the carrier or alumina temperature [12]. Therefore, the SiC MESFETs are operating at a junction temperature of 500 and 520 ºC for the two designs at the

highest temperature of operation. A photograph of the transistor after high temperature operation is shown in Fig. 9. Clearly seen are cracks that have formed in the metallization and diffusion of a lower level metal through the cracks. For both circuits, the gate current is 0 mA from 25 to 400 ºC, but it increases to 4 and 6 mA in the 30 and 100 MHz designs, respectively, before oscillation stops. There is a permanent change in the transistor DC IV characteristics.

In addition to the failure of the transistor, the gold metal on the alumina migrates, especially in the region of the gate contact pad and the capacitor C_2. Figure 10 shows an SEM photograph of C_2 after operation at 470 ºC. Au migration evidence was seen to start in the 450 ºC circuit.

VI. Conclusions

The paper reports the highest temperature operation of RF oscillators. The failure of the SiC MESFET would appear to limit the highest temperature to less than 400 ºC, but further research is required to establish the temperature limits. In addition, the metallization used for the passive components requires refinement to eliminate the movement of large, Au particles.

Acknowledgement

This work was supported by the NASA Integrated Vehicle Health Management (IVHM) program. The authors thank Nicholas C. Varaljay and Elizabeth A. McQuaid for fabricating the circuits.

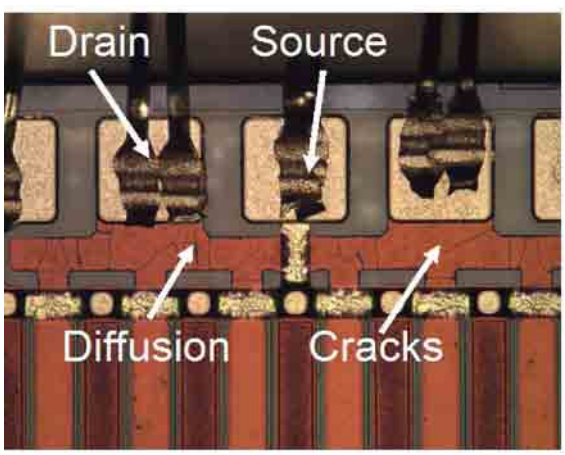

Figure 9: Photograph of SiC MESFET after 470 ºC carrier temperature.

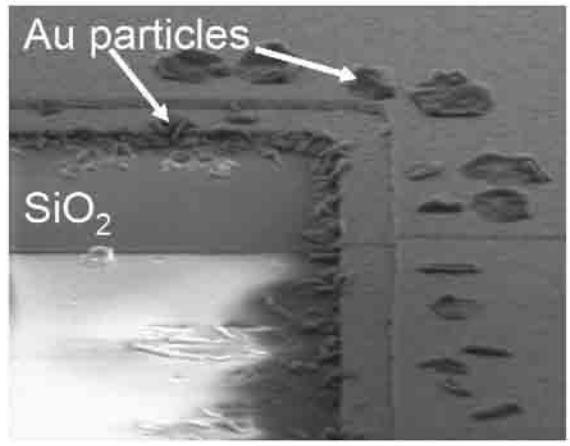

Figure 10: SEM photograph of capacitor C2 after 470 ºC operation. Au particles have migrated from upper Au layer to regions of high electric fields.

References

[1] R. W. Johnson, J. L. Evans, P. Jacobsen. J. R. Thompson and M. Christopher, "The changing automotive environment: high-temperature electronics," *IEEE Trans. Electronics Packaging Manufacturing*, Vol. 27, No. 3, pp. 164-176, July 2004.

[2] B. A. Goldstein, A. J. Hill, A. Long, A. R. Budd, F. Holgate, and M. Malavazos, "Hot rock geothermal energy plays in Australia," in *Proc. Thirty-Fourth Workshop on Geothermal Reservoir Engineering*, Stanford Univ., Stanford, CA, Feb. 9-11, 2009.

[3] R. A. Normann, "First high-temperature electronics products survey 2005," Sandia National Laboratories Sandia Report SAND2006-1580, April 2006.

[4] J. S. Litt, D. L. Simon, S. Garg, Ten-Heui Guo, C. Mercer, R. Millar, A. Behbahani, A. Bajwa, and D. T. Jensen, "A survey of intelligent control and health management technologies for aircraft propulsion systems," NASA/TM-2005-213622, ARL-TR-3413, May 2005.

[5] A. R. Behbahani, "Need for robust sensors for inherently fail-safe gas turbine engine controls, monitoring, and prognostics," AFRL-PR-WP-TP-2007-217, Nov. 2006, also in Proc. 2006 52nd Int. Instrumentation Symp.

[6] D. E. Culley, R. Thomas and J. Saus, "Concepts for distributed engine control," NASA TM 2007-214994, Nov. 2007.

[7] M. Suster, D. J. Young and Wen H. Ko, "Micro-power wireless transmitter for high-temperature MEMS sensing and communication applications," *Proc. IEEE Microelectromechanical Systems (MEMS) 2002*, Las Vegas, NV, Jan. 20-24, 2002, pp. 641-644.

[8] Run Wang, Wen H. Ko and D. Young, "Silicon-carbide MESFET-based 400 º C MEMS sensing and data telemetry," *IEEE Sensors Journal*, Vol. 5, No. 6, Dec. 2005, pp. 1389-1394.

[9] Z. D. Schwartz and G. E. Ponchak, "1 GHz, 200 ºC, SiC MESFET Clapp oscillator," *IEEE Microwave and Wireless Component Lett.*, Vol. 15, No. 11, pp. 730-732, Nov. 2005.

[10] G. E. Ponchak, M. C. Scardelletti and J. L. Jordan, "270 oscillator-type active antenna," *IET Electronics Letters*, Vol. 45, Issue 8, April 9, 2009, pp. 386-387.

[11] Guillermo Gonzalez, *Foundations of Oscillator Circuit Design*, Artech House, Norood, MA, USA, 2007, pp. 122-123.

[12] G. E. Ponchak, J. I. Eldridge and I. L. Krainsky, "Raman channel temperature measurement of SiC MESFET as a function of ambient temperature and DC power," *2009 IEEE MTT-S Int. Micro. Symp. Dig.*, Boston, MA, June 7-12, 2009, pp. 885-888.